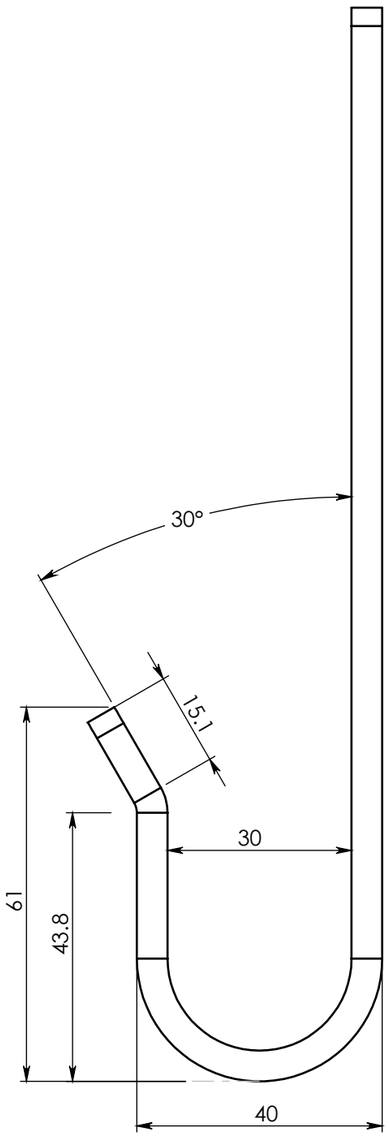

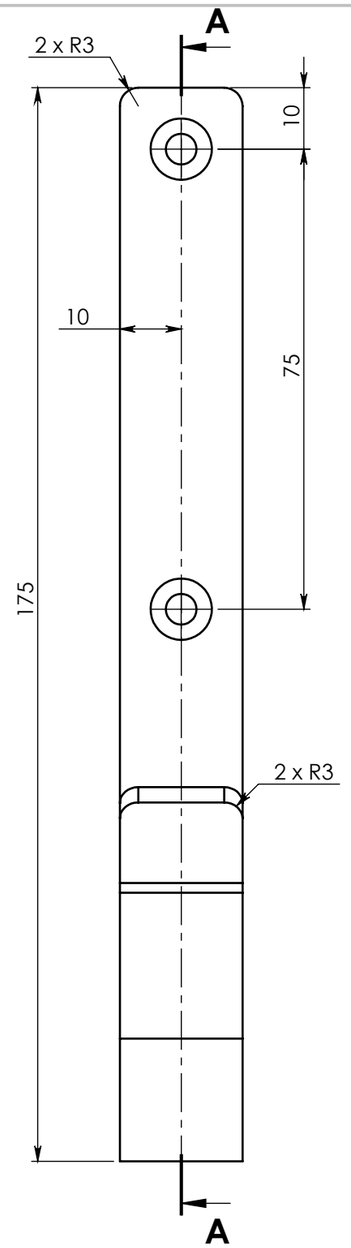

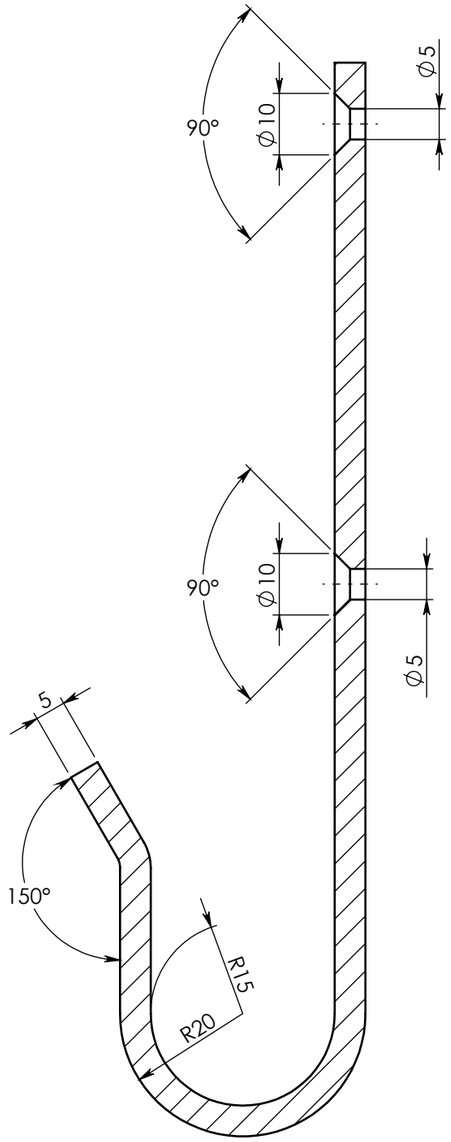

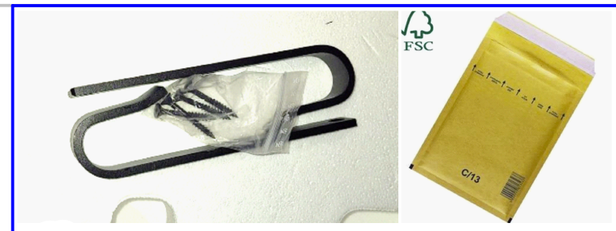
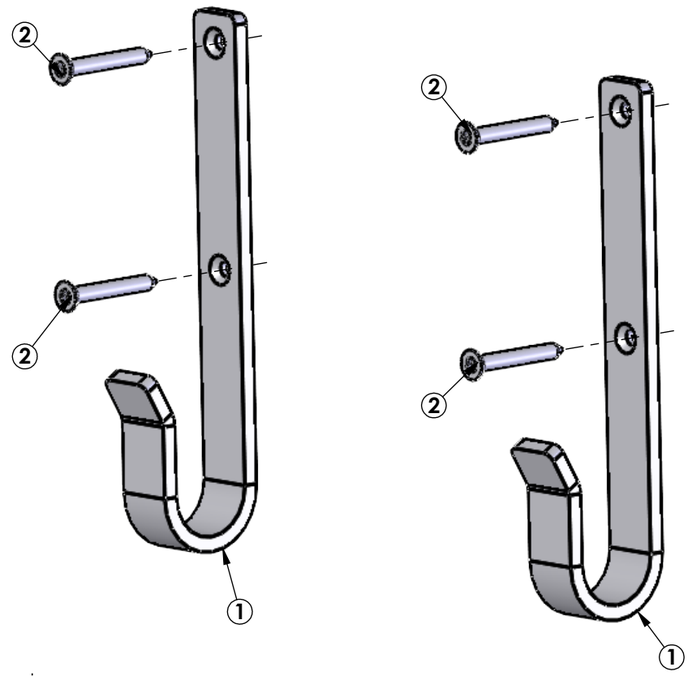
PlicShock Block C13
(170x225+50mm)